Nomenclature

Y M 86 A 1 G - V 10 0

Product Type

Capacity at Rating Point, 50Hz: X 100 Watt

Application
- H - A/C & Chiller
- M - Mid. Temp.
- F - Low Temp.
- W - Heat Pump

A - R22
or Other Refrigerants Application in 3GS Oil

C - R410A

E - R404A
or Other Refrigerants Application in POE Oil

J - R134a

T - R407C
or Other Refrigerants Application in POE Oil

Remarks: Pls Confirm with InvoTech for Refrigerants that Not Been Involved.

1 - 3ph/380-420V/50Hz
or 3ph/460V/60Hz

2 - 1ph/220V/50Hz

3 - 1ph/220V/60Hz

5 - 3ph/380V/60Hz

6 - 3ph/220V/50Hz

7 - 3ph/220V/60Hz

8 - 3ph/575V/60Hz

Default - None

G - Sight Glass and Welding Joint

S - Sight Glass and Screw Joint

Model Code
- Default - None
- V - Vapor Injection
- Q - Liquid Injection

Accessory Code

Engineering Code

Y S F 90 E 1 G - V 10 0

Product Type

Semi-Hermetic Scroll

Capacity at Rating Point, 50Hz: X 100 Watt

Application
- F - Low Temp.

A - R22
or Other Refrigerants Application in 3GS Oil

E - R404A
or Other Refrigerants Application in POE Oil

1 - 380~420V/3PH/50HZ

4 - 460V/3PH/60HZ

5 - 380V/3PH/60HZ

7 - 220V/3PH/60HZ

G - Sight Glass and Welding Joint

Model Code
- V - Vapor Injection

Accessory Code
- 20 - Enhanced Type Controll Board
- 10 - Standard Type Controll Board

Engineering Code

YH/YSH Series

For A/C and Chiller

Model	Electricity V/HZ	Phase	Power (HP)	Displ. m³/h	Cooling Capacity (W)	Power in Watt (W)	COP (W/W)	Running Current (A)	Dimensions
R410A									
YH95C1-100	380V/50HZ	3	3.5	6.7	9500	3170	3.00	5.8	P14
YH119C1-100	380V/50HZ	3	4	8.0	11900	3888	3.06	7.4	P14
YH128C1-100	380V/50HZ	3	4.3	8.6	12800	4183	3.06	7.7	P14
YH150C1-100	380V/50HZ	3	5	10.3	15000	4854	3.09	8.6	P14
YH175C1-100	380V/50HZ	3	6	11.5	17300	5545	3.12	9.7	P14
YH183C1-100	380V/50HZ	3	6.5	12.4	18300	5810	3.15	10.4	P14
YH230C1-100	380V/50HZ	3	8	15.8	23000	7210	3.19	13.4	P15
YH266C1-100	380V/50HZ	3	9	17.4	26600	8340	3.19	14.8	P15
YH292C1-100	380V/50HZ	3	10	18.7	29200	9070	3.22	15.8	P15
YH325C1-100	380V/50HZ	3	11	21.4	32500	10100	3.22	17.7	P15
YH355C1-100	380V/50HZ	3	12	22.9	34800	10800	3.22	18.2	P15
R22									
YH69A2-100	220V/50HZ	1	2	6.7	6800	2180	3.12	10.3	P14
YH89A2-100	220V/50HZ	1	3	8.6	8900	2799	3.18	13.3	P14
YH104A2-100	220V/50HZ	1	3.5	10.3	10600	3230	3.28	15.3	P14
YH119A2-100	220V/50HZ	1	4	11.5	11900	3625	3.28	17.2	P14
YH128A2-100	220V/50HZ	1	4.3	12.4	12800	3830	3.34	18.2	P14
YH69A1-100	380V/50HZ	3	2	6.7	6800	2140	3.18	4.8	P14
YH89A1-100	380V/50HZ	3	3	8.6	8900	2650	3.35	5.3	P14
YH104A1-100	380V/50HZ	3	3.5	10.3	10600	3160	3.35	6.5	P14
YH119A1-100	380V/50HZ	3	4	11.5	11900	3520	3.38	7.0	P14
YH128A1-100	380V/50HZ	3	4.3	12.4	12800	3710	3.45	7.5	P14
YH133A1-100	380V/50HZ	3	4.5	12.9	13300	3860	3.45	7.7	P14
YH140A1-100	380V/50HZ	3	4.7	13.5	14000	4090	3.42	8.0	P14
YH150A1-100	380V/50HZ	3	5	14.5	15000	4370	3.42	8.3	P14
YH175A1-100	380V/50HZ	3	6	16.9	17200	4980	3.45	9.0	P14
YH200A1-100	380V/50HZ	3	7	18.7	20000	5880	3.40	11.3	P15
YH230A1-100	380V/50HZ	3	8	21.4	23100	6700	3.45	12.7	P15
YH266A1-100	380V/50HZ	3	9	24.7	26600	7700	3.45	14.6	P15
YH307A1-100	380V/50HZ	3	10	29.1	30700	8820	3.48	15.4	P15
YH355A1-100	380V/50HZ	3	12	32.9	35500	10140	3.50	17.6	P15
YSH400A1G-100	380V/50HZ	3	13	37.7	40600	11941	3.40	21.3	P23
YSH450A1G-100	380V/50HZ	3	15	42.5	45800	13470	3.40	24.2	P23

Ambient Temp. 35°C, E.T. 7.2°C, C.T. 54.4°C, Subcooling 8.3K, R.G.T. 18.3°C

INVOTECH

Product Dimensions

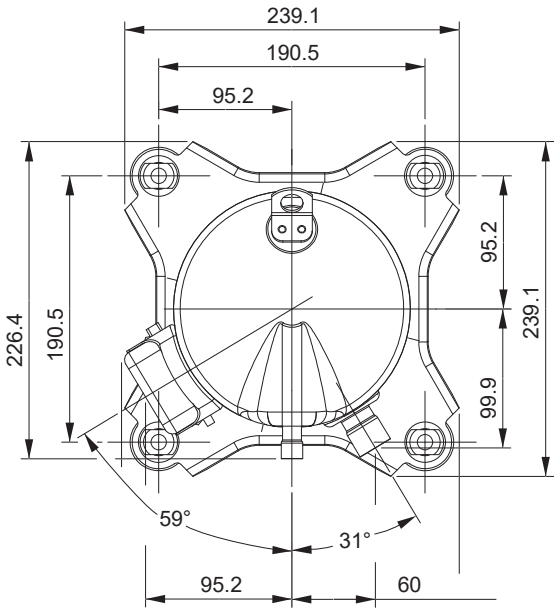

Wiring Diagram

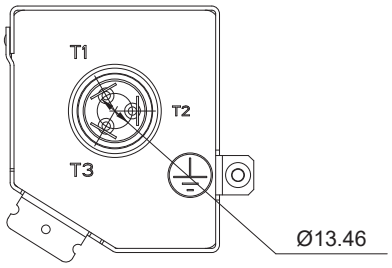

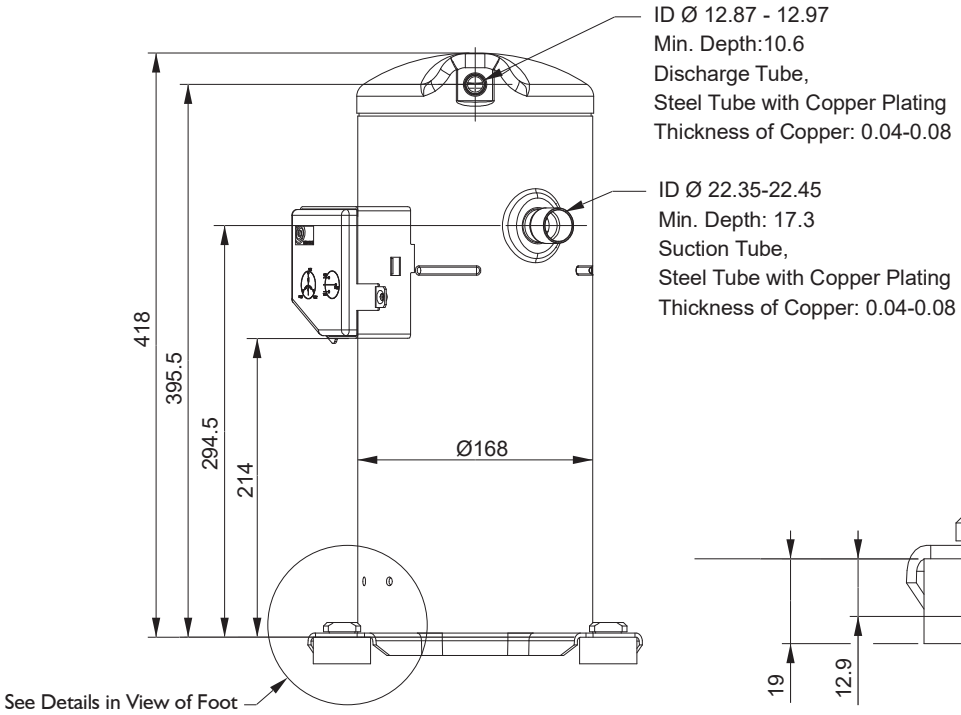

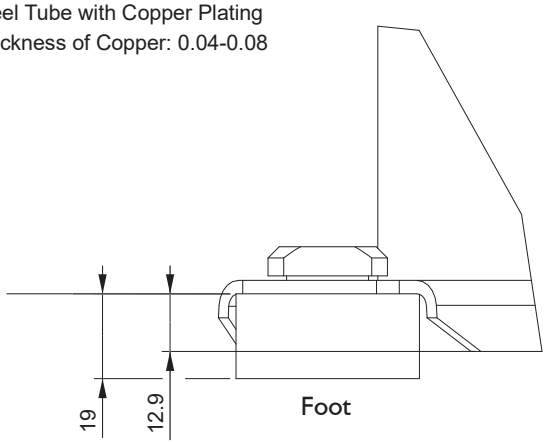
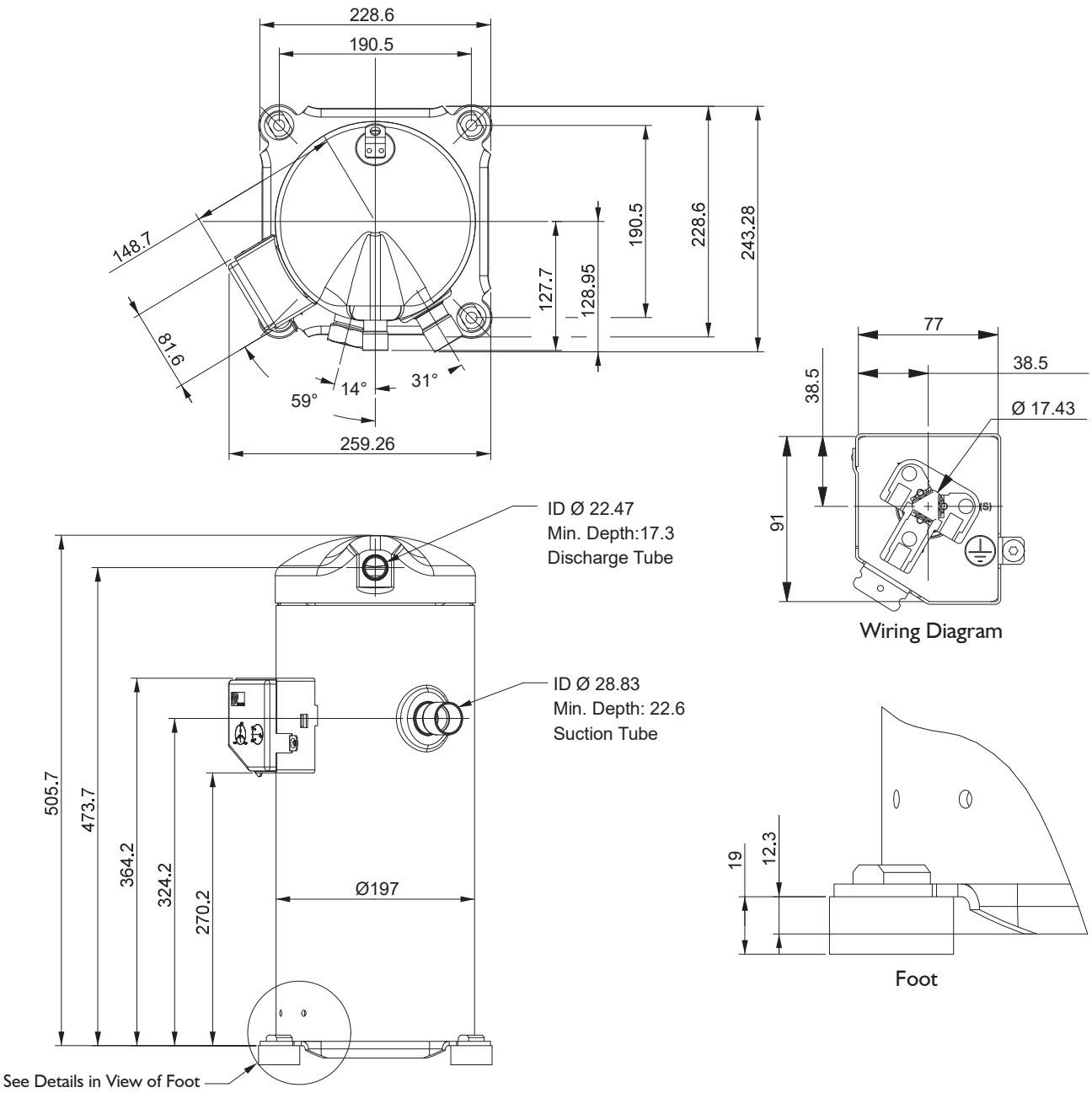
Product Dimensions