RFKH *SERIES*

THERMOSTATIC EXPANSION VALVE

RFKH series thermostatic expansion valves are used to adjust mass flow of refrigerant into the evaporator while controlling the refrigerant´s superheat at the outlet of the evaporator. They can be used for various refrigerants under all working conditions. Typical applications are refrigeration systems like freezers, ice makers, dehumidifiers as well as air conditioners and heat pumps at various evaporation temperature ranges.

FEATURES

- STAINLESS STEEL CAPILLARY AND SENSING BULB
- EXCHANGEABLE VALVE ORIFICE, EASY TO STOCK HOLDING, CONVENIENT FOR CAPACITY MATCH AND REPAIR
- THERMAL BULB UTILIZES CROSS CHARGE TECHNOLOGY, PROVIDING CONSISTENT SUPERHEAT DEGREE OVER THE WHOLE EVAPORATION TEMPERATURE RANGE
- VALVES WITH MOP FUNCTION CAN BE PROVIDED TO ASSURE RELIABLE COMPRESSOR OPERATION
- APPLICABLE IN A WIDE EVAPORATION TEMPERATURE RANGE
- RELIABLE AND CONSISTENT PERFORMANCE OF SUPERHEAT CONTROL

GENERAL SPECIFICATIONS

- Applicable for all common HCFC and HFC refrigerants such as: R22, R407C, R404A, R507, R134a, R404A, R410A, R407A, R407F, R448A/R449A, R452A, R450A/R513A, R455A, R454C
- Ambient temperature min./max.: -35°C / +55°C
- Medium temperature TS min./max.: -40°C / +70°C extended to -60°C / +70°C for range B models
- Max. operating pressure PS: 4.6 MPa (46 bar)
- Installation position:
  - Preferably valve head upwards
  - Flow direction from inlet A to outlet B
- Certifications: UL/CSA and PED declaration

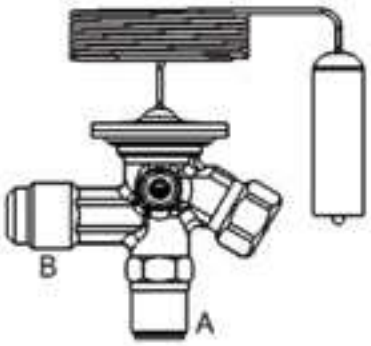

THERMOSTATIC EXPANSION VALVE

TECHNICAL PARAMETERS

- RFKH series angle shape valve
- Inlet 3/8" flare connection
- Capillary tube length 1,5m
- Equalization port:
  - RFKH flare/flare type with ¼" flare connection;
  - RFKH flare/solder type with ¼" or 6mm solder connection

MODEL DESIGNATION LEGEND

Position Number	Model Designation Legend	
1	**Product Code**	**Product Series**
	RFKH	Thermostatic expansion valve
2	**Refrigerant**	**Description**
	01	R22
	02	R407C
	03	R404A / R507A
	04	R134a
	05	R410A
	07	R407A / R407F
	08	R448A / R449A
	10	R450A
	11	R452A
	14	R513A
	20	R455A / R454C
3	**Pressure Equalization**	**Description**
	E	External pressure equalization
	(Omitted)	Internal pressure equalization
4	**Miscellaneous**	**Description**
	xxxxA	Digits for additional information

THERMOSTATIC EXPANSION VALVE

MODEL DESIGNATION EXAMPLE

Position Number					According to Model Designation Legend
1	2	3	4	5	
RFKH	01	E	xxx	xxxA	Thermostatic expansion valve
RFKH	**01**	E	xxx	xxxA	Refrigerant R22
RFKH	01	**E**	xxx	xxxA	Connection for external pressure equalization
RFKH	01	E	**xxx**	xxxA	Nominal Capacity (in USRT)
RFKH	01	E	xxx	**xxxA**	Digits for additional information

MODELS DESIGNATION (VALVE HEAD)

Code	Description
KH01-6.0-26A	Part number
-40/10°C	Evaporating temperature (°C)
-40/+50°F	Evaporating temperature (°F)
R22/R407C	Refrigerant
MWP 4.6Mpa	Max. Working pressure (MPa)
MWP 665psig	Evaporating temperature (Psig)

MODELS WITH MOP FUNCTION

RFKH valves can be selected with MOP (Max. Operating Pressure) function.
MOP protects the compressor motor against excessive evaporating pressure during normal operation.

Refrigerant	Range N (-40°C to +10°C)	Range NM (-40°C to -5°C)	Range NL (-40°C to -15°C)	Range B (-60°C to -25°C)
	MOP = +15°C	MOP = 0°C	MOP = -10°C	MOP = -20°C
R22	6,9 barg - STD	4,0 barg – O.R.	2,5 barg - STD	N.A.
R407C	6,6 barg - STD	N.A.	N.A.	N.A.
R404A / R507	8,4 barg - STD	5,0 barg – O.R.	3,3 barg - STD	2,0 barg - STD
R134a	3,9 barg - STD	1,9 barg – O.R.	1,0 barg – O.R.	N.A.
R410A	11,5 barg - STD	7,0 barg – O.R.	4,7 barg - STD	N.A.
R407A / R407F	7,9 barg - STD	N.A.	N.A.	N.A.
R448A / R449A	7,3 barg - O.R.	4,2 barg – O.R.	2,6 barg - STD	1,5 barg - O.R.
R450A	3,2 barg - O.R.	1,5 barg – O.R.	0,7 barg - O.R.	N.A.
R452A	8,0 barg - O.R.	4,6 barg – O.R.	3,0 barg - STD	1,7 barg - STD
R513A	4,3 barg - O.R.	2,3 barg – O.R.	1,3 barg - O.R.	N.A.
R455A	6,8 barg - O.R.	3,8 barg – O.R.	2,4 barg - O.R.	N.A.
R454C	6,3 barg - O.R.	3,5 barg – O.R.	2,2 barg - O.R.	N.A.

Note: STD : Standard product
O.R. : On Request
N.A. : Not Available

THERMOSTATIC EXPANSION VALVE

TECHNICAL PARAMETERS

Tab. A : Models with Range N : Temperature Range from -40°C to +10°C [without MOP]

Ref.	Model Valve Body	Part Number[1 & 4)]	Connection type	Inlet ØA	Outlet ØB			Ext. ØC		
			In / Out / Ext. Pressure Equal.	Flare	Flare	Solder		Flare	Solder	Solder
				[inch]	[inch]	[mm]	[inch]	[inch]	[inch]	[mm]
R22	RFKH01-6.0-22A	10201028802	flare / flare	3/8	1/2	-	-	-	-	-
	RFKH01E-6.0-13A	10201028902	flare / flare / flare		1/2	-	-	1/4	-	-
	RFKH01-6.0-26A	10201029202	flare / solder		-	12	-	-	-	-
	RFKH01E-6.0-06A	10201033302	flare / solder / solder		-	12	-	-	-	6
	RFKH01-6.0-07A	10201029102	flare / solder		-	-	1/2	-	-	-
	RFKH01E-6.0-08A	10201029002	flare / solder / solder		-	-	1/2	-	1/4	-
R407C	RFKH02-6.3-24A	10201037902	flare / flare	3/8	1/2	-	-	-	-	-
	RFKH02E-6.3-20A	10201040002	flare / flare / flare		1/2	-	-	1/4	-	-
	RFKH02-6.3-27A	10201029302	flare / solder		-	12	-	-	-	-
	RFKH02E-6.3-28A	10201033602	flare / solder / solder		-	12	-	-	-	6
	RFKH02-6.3-32A	10201029402	flare / solder		-	-	1/2	-	-	-
	RFKH02E-6.3-18A	10201033502	flare / solder / solder		-	-	1/2	-	1/4	-
R404A / R507A	RFKH03-4.8-21A	10201028402	flare / flare	3/8	1/2	-	-	-	-	-
	RFKH03E-4.8-15A	10201028502	flare / flare / flare		1/2	-	-	1/4	-	-
	RFKH03-4.8-03A	10201029702	flare / solder		-	12	-	-	-	-
	RFKH03E-4.8-02A	10201033902	flare / solder / solder		-	12	-	-	-	6
	RFKH03-4.8-09A	10201028702	flare / solder		-	-	1/2	-	-	-
	RFKH03E-4.8-10A	10201027402	flare / solder / solder		-	-	1/2	-	1/4	-
R134a	RFKH04-2.9-23A	10201038502	flare / flare	3/8	1/2	-	-	-	-	-
	RFKH04E-2.9-19A	10201040602	flare / flare / flare		1/2	-	-	1/4	-	-
	RFKH04-2.9-29A	10201030702	flare / solder		-	12	-	-	-	-
	RFKH04E-2.9-17A	10201035202	flare / solder / solder		-	12	-	-	-	6
	RFKH04-2.9-30A	10201030802	flare / solder		-	-	1/2	-	-	-
	RFKH04E-2.9-31A	10201035302	flare / solder / solder		-	-	1/2	-	-	1/4
R410A	RFKH05-7.6-66A	10201028002	flare / flare	3/8	1/2	-	-	-	-	-
	RFKH05E-7.6-33A	10201028302	flare / flare / flare		1/2	-	-	1/4	-	-
	RFKH05-7.6-37A	10201031002	flare / solder		-	12	-	-	-	-
	RFKH05E-7.6-36A	10201035502	flare / solder / solder		-	12	-	-	-	6
	RFKH05-7.6-35A	10201028102	flare / solder		-	-	1/2	-	-	-
	RFKH05E-7.6-34A	10201028202	flare / solder / solder		-	-	1/2	-	-	1/4
R407A / R407F	RFKH07-6.0-43A	10201038702	flare / flare	3/8	1/2	-	-	-	-	-
	RFKH07E-6.0-42A	10201040902	flare / flare / flare		1/2	-	-	1/4	-	-
	RFKH07-6.0-44A	10201046402	flare / solder		-	12	-	-	-	-
	RFKH07E-6.0-41A	10201035702	flare / solder / solder		-	12	-	-	-	6
	RFKH07-6.0-45A	10201031102	flare / solder		-	-	1/2	-	-	-
	RFKH07E-6.0-46A	10201035802	flare / solder / solder		-	-	1/2	-	-	1/4

THERMOSTATIC EXPANSION VALVE

TECHNICAL PARAMETERS

Tab. A : Models with Range N : Temperature Range from -40°C to +10°C [without MOP]

Ref.	Model Valve Body	Part Number[1 & 4)]	Connection type	Inlet ØA	Outlet ØB			Ext. ØC		
			In / Out / Ext. Pressure Equal.	Flare	Flare	Solder		Flare	Solder	Solder
				[inch]	[inch]	[mm]	[inch]	[inch]	[inch]	[mm]
R448A / R449A	RFKH08-6.1-49A	10201038802	flare / flare	3/8	1/2	-	-	-	-	-
	RFKH08E-6.1-48A	10201041002	flare / flare / flare		1/2	-	-	1/4	-	-
	RFKH08-6.1-50A	10201031202	flare / solder		-	12	-	-	-	-
	RFKH08E-6.1-47A	10201035902	flare / solder / solder		-	12	-	-	-	6
	RFKH08-6.1-51A	10201031302	flare / solder		-	-	1/2	-	-	-
	RFKH08E-6.1-52A	10201036002	flare / solder / solder		-	-	1/2	-	1/4	-
R450A	RFKH10-2.8-61A	10201039202	flare / flare	3/8	1/2	-	-	-	-	-
	RFKH10E-2.8-60A	10201041402	flare / flare / flare		1/2	-	-	1/4	-	-
	RFKH10-2.8-72A	10201031802	flare / solder		-	12	-	-	-	-
	RFKH10E-2.8-59A	10201036602	flare / solder / solder		-	12	-	-	-	6
	RFKH10-2.8-63A	10201047402	flare / solder		-	-	1/2	-	-	-
	RFKH10E-2.8-64A	10201047502	flare / solder / solder		-	-	1/2	-	1/4	-
R452A	RFKH11-4.5-55A	10201039302	flare / flare	3/8	1/2	-	-	-	-	-
	RFKH11E-4.5-54A	10201041502	flare / flare / flare		1/2	-	-	1/4	-	-
	RFKH11-4.5-56A	10201031902	flare / solder		-	12	-	-	-	-
	RFKH11E-4.5-53A	10201036702	flare / solder / solder		-	12	-	-	-	6
	RFKH11-4.5-57A	10201032002	flare / solder		-	-	1/2	-	-	-
	RFKH11E-4.5-58A	10201036802	flare / solder / solder		-	-	1/2	-	1/4	-
R513A	RFKH14-2.7-68A	10201039602	flare / flare	3/8	1/2	-	-	-	-	-
	RFKH14E-2.7-67A	10201041902	flare / flare / flare		1/2	-	-	1/4	-	-
	RFKH14-2.7-70A	10201032702	flare / solder		-	12	-	-	-	-
	RFKH14E-2.7-65A	10201037402	flare / solder / solder		-	12	-	-	-	6
	RFKH14-2.7-71A	10201032802	flare / solder		-	-	1/2	-	-	-
	RFKH14E-2.7-76A	10201037502	flare / solder / solder		-	-	1/2	-	1/4	-
R455A / R454C	RFKH20-4.3-80A	10201039702	flare / flare	3/8	1/2	-	-	-	-	-
	RFKH20E-4.3-79A	10201042002	flare / flare / flare		1/2	-	-	1/4	-	-
	RFKH20-4.3-81A	10201032902	flare / solder		-	12	-	-	-	-
	RFKH20E-4.3-78A	10201037602	flare / solder / solder		-	12	-	-	-	6
	RFKH20-4.3-82A	10201033002	flare / solder		-	-	1/2	-	-	-
	RFKH20E-4.3-83A	10201037702	flare / solder / solder		-	-	1/2	-	1/4	-

THERMOSTATIC EXPANSION VALVE

Tab. B : Models with Range N : Temperature Range from -40°C to +10°C [with MOP = +15°C]

Ref.	Model Valve Body	Part Number[1 & 4)]	Connection type	Inlet ØA	Outlet ØB			Ext. ØC		
			In / Out / Ext. Pressure Equal.	Flare	Flare	Solder		Flare	Solder	Solder
				[inch]	[inch]	[mm]	[inch]	[inch]	[inch]	[mm]
R22	RFKH 01-6.0-205A	10201042302	flare / flare	3/8	1/2	-	-	-	-	-
	RFKH01E-6.0-204A	10201039902	flare / flare / flare		1/2	-	-	1/4	-	-
	RFKH01-6.0-206A	10201042402	flare / solder		-	12	-	-	-	-
	RFKH01E-6.0-201A	10201042102	flare / solder / solder		-	12	-	-	-	6
	RFKH01-6.0-202A	10201042202	flare / solder		-	-	1/2	-	-	-
	RFKH01E-6.0-203A	10201033402	flare / solder / solder		-	-	1/2	-	1/4	-
R407C	RFKH02-6.3-209A	10201038002	flare / flare	3/8	1/2	-	-	-	-	-
	RFKH02E-6.3-208A	10201043702	flare / flare / flare		1/2	-	-	1/4	-	-
	RFKH02-6.3-210A	10201029502	flare / solder		-	12	-	-	-	-
	RFKH02E-6.3-211A	10201033802	flare / solder / solder		-	12	-	-	-	6
	RFKH02-6.3-212A	10201029602	flare / solder		-	-	1/2	-	-	-
	RFKH02E-6.3-207A	10201033702	flare / solder / solder		-	-	1/2	-	1/4	-
R404A / R507A	RFKH03-4.8-218A	10201045102	flare / flare	3/8	1/2	-	-	-	-	-
	RFKH03E-4.8-217A	10201040302	flare / flare / flare		1/2	-	-	1/4	-	-
	RFKH03-4.8-214A	10201030102	flare / solder		-	12	-	-	-	-
	RFKH03E-4.8-213A	10201034502	flare / solder / solder		-	12	-	-	-	6
	RFKH03-4.8-215A	10201030202	flare / solder		-	-	1/2	-	-	-
	RFKH03E-4.8-216A	10201034602	flare / solder / solder		-	-	1/2	-	1/4	-
R134a	RFKH04-2.9-221A	10201038602	flare / flare	3/8	1/2	-	-	-	-	-
	RFKH04E-2.9-220A	10201040702	flare / flare / flare		1/2	-	-	1/4	-	-
	RFKH04-2.9-222A	10201045302	flare / solder		-	12	-	-	-	-
	RFKH04E-2.9-219A	10201045202	flare / solder / solder		-	12	-	-	-	6
	RFKH04-2.9-223A	10201030902	flare / solder		-	-	1/2	-	-	-
	RFKH04E-2.9-224A	10201035402	flare / solder / solder		-	-	1/2	-	-	1/4
R410A	RFKH05-7.6-230A	10201045702	flare / flare	3/8	1/2	-	-	-	-	-
	RFKH05E-7.6-225A	10201040802	flare / flare / flare		1/2	-	-	1/4	-	-
	RFKH05-7.6-229A	10201045602	flare / solder		-	12	-	-	-	-
	RFKH05E-7.6-228A	10201045502	flare / solder / solder		-	12	-	-	-	6
	RFKH05-7.6-227A	10201045402	flare / solder		-	-	1/2	-	-	-
	RFKH05E-7.6-226A	10201035602	flare / solder / solder		-	-	1/2	-	-	1/4

THERMOSTATIC EXPANSION VALVE

Tab. C : Models with Range NL : Temperature Range from -40°C to -15°C [with MOP = -10°C]

Ref.	Model Valve Body	Part Number[1 & 4)]	Connection type	Inlet ØA	Outlet ØB			Ext. ØC		
			In / Out / Ext. Pressure Equal.	Flare	Flare	Solder		Flare	Solder	Solder
				[inch]	[inch]	[mm]	[inch]	[inch]	[inch]	[mm]
R404A / R507A	RFKH03-4.8-312A	10201038302	flare / flare	3/8	1/2	-	-	-	-	-
	RFKH03E-4.8-311A	10201040402	flare / flare / flare		1/2	-	-	1/4	-	-
	RFKH03-4.8-308A	10201030302	flare / solder		-	12	-	-	-	-
	RFKH03E-4.8-307A	10201034802	flare / solder / solder		-	12	-	-	-	6
	RFKH03-4.8-309A	10201030402	flare / solder		-	-	1/2	-	-	-
	RFKH03E-4.8-310A	10201034902	flare / solder / solder		-	-	1/2	-	1/4	-
R448A / R449A	RFKH08-6.1-315A	10201039002	flare / flare	3/8	1/2	-	-	-	-	-
	RFKH08E-6.1-314A	10201041202	flare / flare / flare		1/2	-	-	1/4	-	-
	RFKH08-6.1-316A	10201031502	flare / solder		-	12	-	-	-	-
	RFKH08E-6.1-313A	10201036302	flare / solder / solder		-	12	-	-	-	6
	RFKH08-6.1-317A	10201031602	flare / solder		-	-	1/2	-	-	-
	RFKH08E-6.1-318A	10201036402	flare / solder / solder		-	-	1/2	-	1/4	-
R452A	RFKH11-4.5-320A	10201039502	flare / flare	3/8	1/2	-	-	-	-	-
	RFKH11E-4.5-319A	10201041702	flare / flare / flare		1/2	-	-	1/4	-	-
	RFKH11-4.5-321A	10201032302	flare / solder		-	12	-	-	-	-
	RFKH11E-4.5-324A	10201037002	flare / solder / solder		-	12	-	-	-	6
	RFKH11-4.5-322A	10201032402	flare / solder		-	-	1/2	-	-	-
	RFKH11E-4.5-323A	10201037102	flare / solder / solder		-	-	1/2	-	-	1/4

Note: 1) Extent of delivery: valve body and bulb strap
2) Different evaporation temperature range on request
3) MOP function on request
4) Part Number is referred to Multi Pack

THERMOSTATIC EXPANSION VALVE

Tab. D : Models with Range B : Temperature Range from -60°C to -25°C [without MOP]

Ref.	Model Valve Body	Part Number[1 & 4)]	Connection type	Inlet ØA	Outlet ØB			Ext. ØC		
			In / Out / Ext. Pressure Equal.	Flare	Flare	Solder		Flare	Solder	Solder
				[inch]	[inch]	[mm]	[inch]	[inch]	[inch]	[mm]
R404A / R507A	RFKH03-4.8-106A	10201038102	flare / flare	3/8	1/2	-	-	-	-	-
	RFKH03E-4.8-105A	10201040102	flare / flare / flare		1/2	-	-	1/4	-	-
	RFKH03-4.8-102A	10201029802	flare / solder		-	12	-	-	-	-
	RFKH03E-4.8-101A	10201034002	flare / solder / solder		-	12	-	-	-	6
	RFKH03-4.8-103A	10201029902	flare / solder		-	-	1/2	-	-	-
	RFKH03E-4.8-104A	10201034102	flare / solder / solder		-	-	1/2	-	1/4	-

Tab. E : Models with Range B : Temperature Range from -60°C to -25°C [with MOP -20°C]

Ref.	Model Valve Body	Part Number[1 & 4)]	Connection type	Inlet ØA	Outlet ØB			Ext. ØC		
			In / Out / Ext. Pressure Equal.	Flare	Flare	Solder		Flare	Solder	Solder
				[inch]	[inch]	[mm]	[inch]	[inch]	[inch]	[mm]
R404A / R507A	RFKH03-4.8-406A	10201038202	flare / flare	3/8	1/2	-	-	-	-	-
	RFKH03E-4.8-405A	10201040202	flare / flare / flare		1/2	-	-	1/4	-	-
	RFKH03-4.8-402A	10201045002	flare / solder		-	12	-	-	-	-
	RFKH03E-4.8-401A	10201034202	flare / solder / solder		-	12	-	-	-	6
	RFKH03-4.8-403A	10201030002	flare / solder		-	-	1/2	-	-	-
	RFKH03E-4.8-404A	10201034302	flare / solder / solder		-	-	1/2	-	1/4	-
R452A	RFKH11-4.5-409A	10201047702	flare / flare	3/8	1/2	-	-	-	-	-
	RFKH11E-4.5-408A	10201041802	flare / flare / flare		1/2	-	-	1/4	-	-
	RFKH11-4.5-410A	10201032502	flare / solder		-	12	-	-	-	-
	RFKH11E-4.5-407A	10201037202	flare / solder / solder		-	12	-	-	-	6
	RFKH11-4.5-411A	10201032602	flare / solder		-	-	1/2	-	-	-
	RFKH11E-4.5-412A	10201037302	flare / solder / solder		-	-	1/2	-	1/4	-

Note: 1) Extent of delivery: valve body and bulb strap
2) Different evaporation temperature range on request
3) MOP function on request
4) Part Number is referred to Multi Pack

THERMOSTATIC EXPANSION VALVE

DIMENSIONS

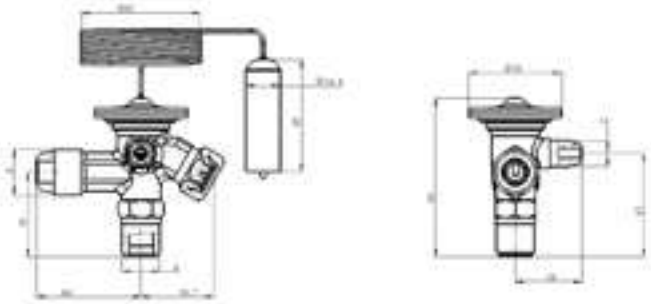

Valve Body - Connection Type: flare/flare/flare

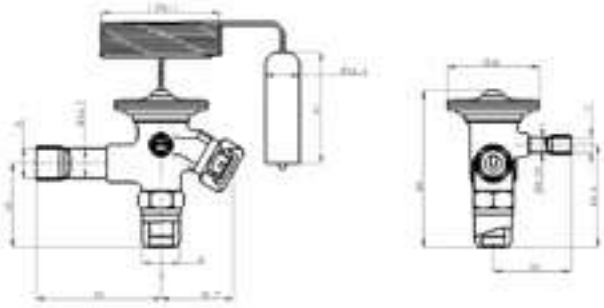

Valve Body - Connection Type: flare/solder/solder

ACCESSORIES

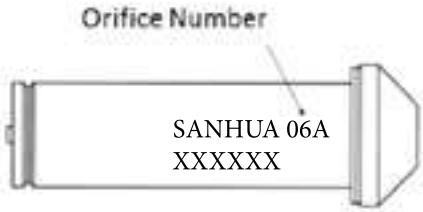

ORIFICES

Orifice Number	Valve Orifice Model	Valve Orifice Part Number	Nominal Capacity[1] [kW]					
			R22	R407C	R404A R507A	R134a	R410A	R407A R407F
0X	RFKH-023-0X	10202001702	1	1	0,7	0,69	1,3	1
0	RFKH-023-00	10202001002	1,9	2,1	1,4	1,2	2,5	1,8
1	RFKH-023-01	10202001102	3,8	4	2,8	2,1	5	3,7
2	RFKH-023-02	10202001202	5,1	5,4	4	2,7	6,2	5,1
3	RFKH-023-03	10202001302	8,6	9,2	6,8	4,4	11,2	8,6
4	RFKH-023-04	10202001402	13,2	13,9	10,8	6,5	17	13,4
5	RFKH-023-05	10202001502	18,1	18,5	14,1	8,6	21,3	17,6
6	RFKH-023-06	10202001602	21,3	22,1	16,8	10,3	26,8	21,2

Orifice Number	Valve Orifice Model	Valve Orifice Part Number	Nominal Capacity[1] [kW]						
			R448A	R449A	R450A	R452A	R513A	R455A	R454C
0X	RFKH-023-0X	10202001702	1,1	1,0	0,6	0,8	0,6	0,6	0,6
0	RFKH-023-00	10202001002	2,1	2,0	1,1	1,5	1,0	1,3	1,2
1	RFKH-023-01	10202001102	4,0	4,0	1,9	3,0	1,8	2,5	2,4
2	RFKH-023-02	10202001202	5,0	4,9	2,3	3,7	2,2	3,5	3,3
3	RFKH-023-03	10202001302	8,9	8,8	4,2	6,7	4,0	6,0	5,8
4	RFKH-023-04	10202001402	13,6	13,4	6,3	10,1	6,1	9,8	9,4
5	RFKH-023-05	10202001502	17,0	16,8	7,9	12,7	7,6	12,6	12,1
6	RFKH-023-06	10202001602	21,4	21,1	9,9	16,0	9,6	15,1	14,5

Note: 1) Nominal working conditions: Condensing temperature 38°C; evaporating temperature +4,4°C; liquid temperature 37°C
2) R407C data based on dew point conditions
3) Nominal capacity based on
- Static Superheat (SS) 5K (for models without MOP) and 4K (for models with MOP)
- Opening Superheat(OS) 6K

THERMOSTATIC EXPANSION VALVE

SOLDER ADAPTERS FOR RFKH INLET A

Model	Part Number[1)]	SAE Flare Ø e	Solder Connection Ø d
RFK-A04-038010	20200001602	3/8″	3/8"
RFK-A04-038011	20201002502		10mm
RFK-A04-038012	20201002602		1/4"
RFK-A04-038013	20201002702		6mm

Note: 1) Copper pipe and flare nut are in the extent of delivery

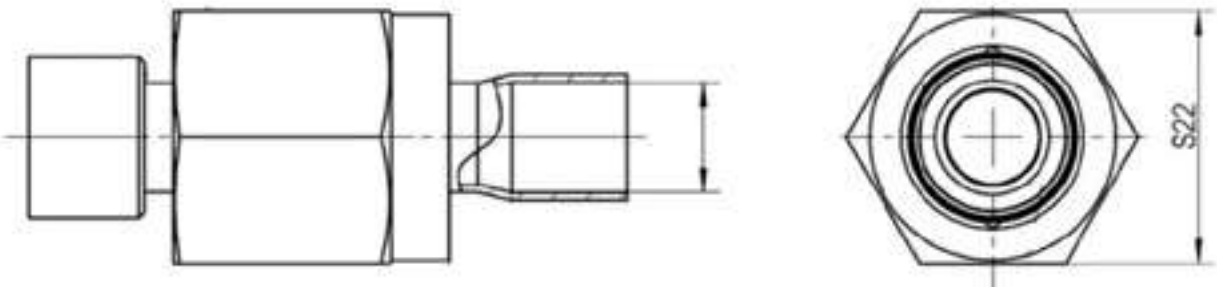

SOLDER ADAPTERS FOR RFKH EXTERNAL PRESSURE EQUALIZATION C

Model	Part Number[1)]	SAE Flare Ø e	Solder Connection Ø d
RFKA-038-03	20201000502	1/4″	6mm
RFKA-038-04	20201000602		1/4"
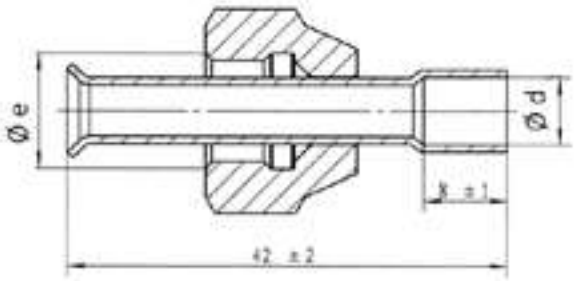
Note: 1) Copper pipe and flare nut are in the extent of delivery